Safety Edge Wireless Transmitter

code: **AUTO057**

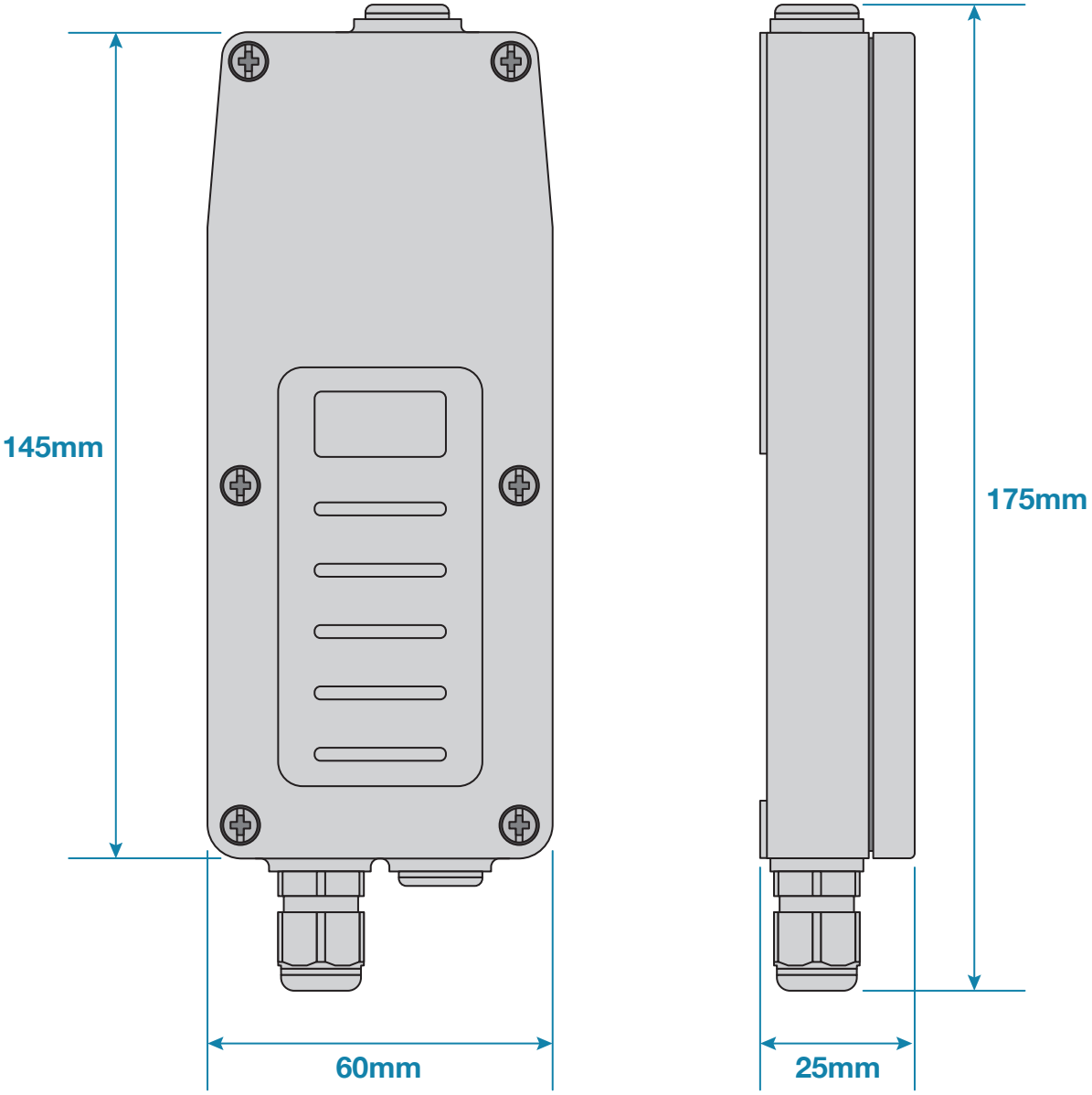

Please Note: Dimensions for guide only. Components may vary slightly from the sizes shown.

Updated: 11-12-2023