DC Iron

GRP Moulded Fitting

code: **FH119**

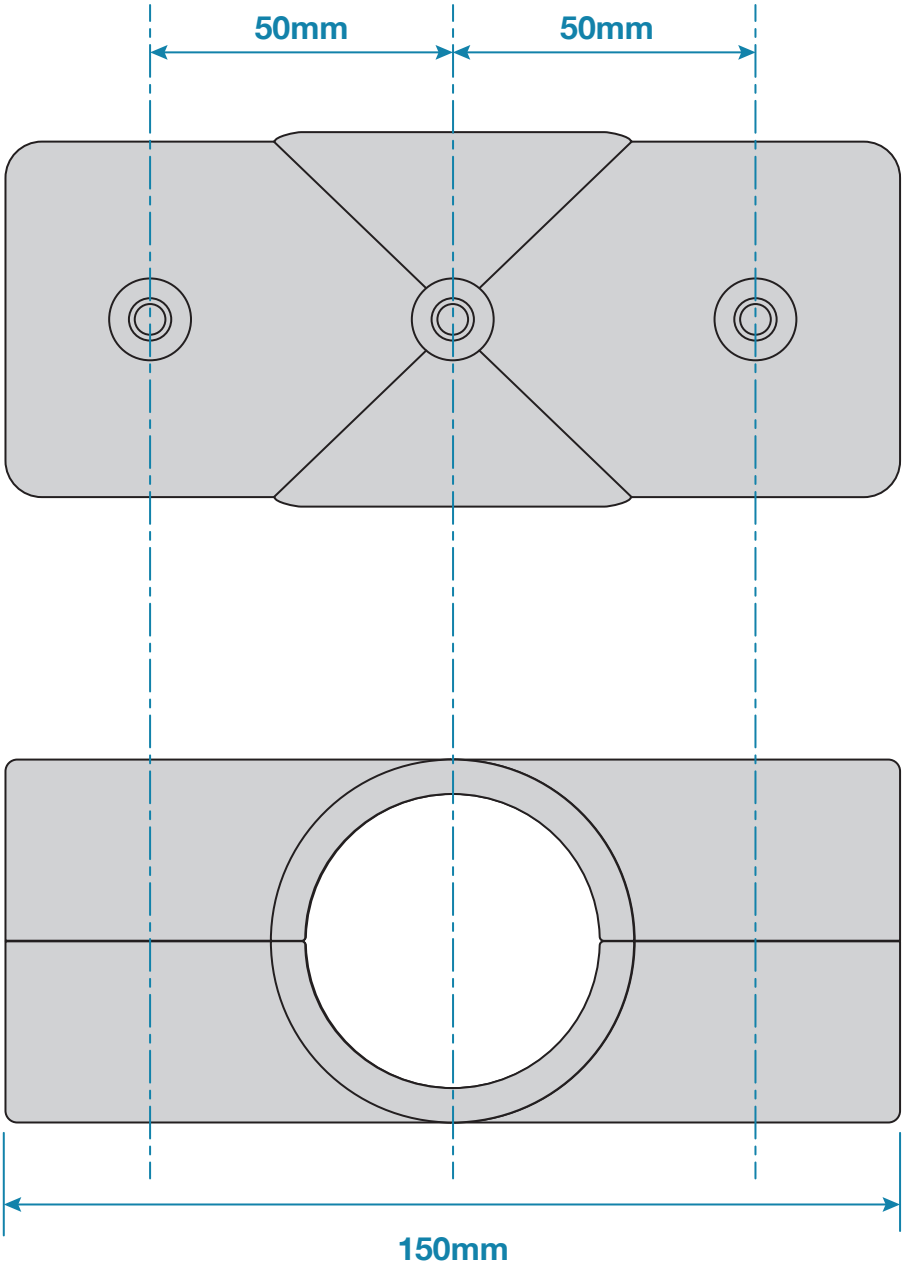

Updated: 15-05-2023