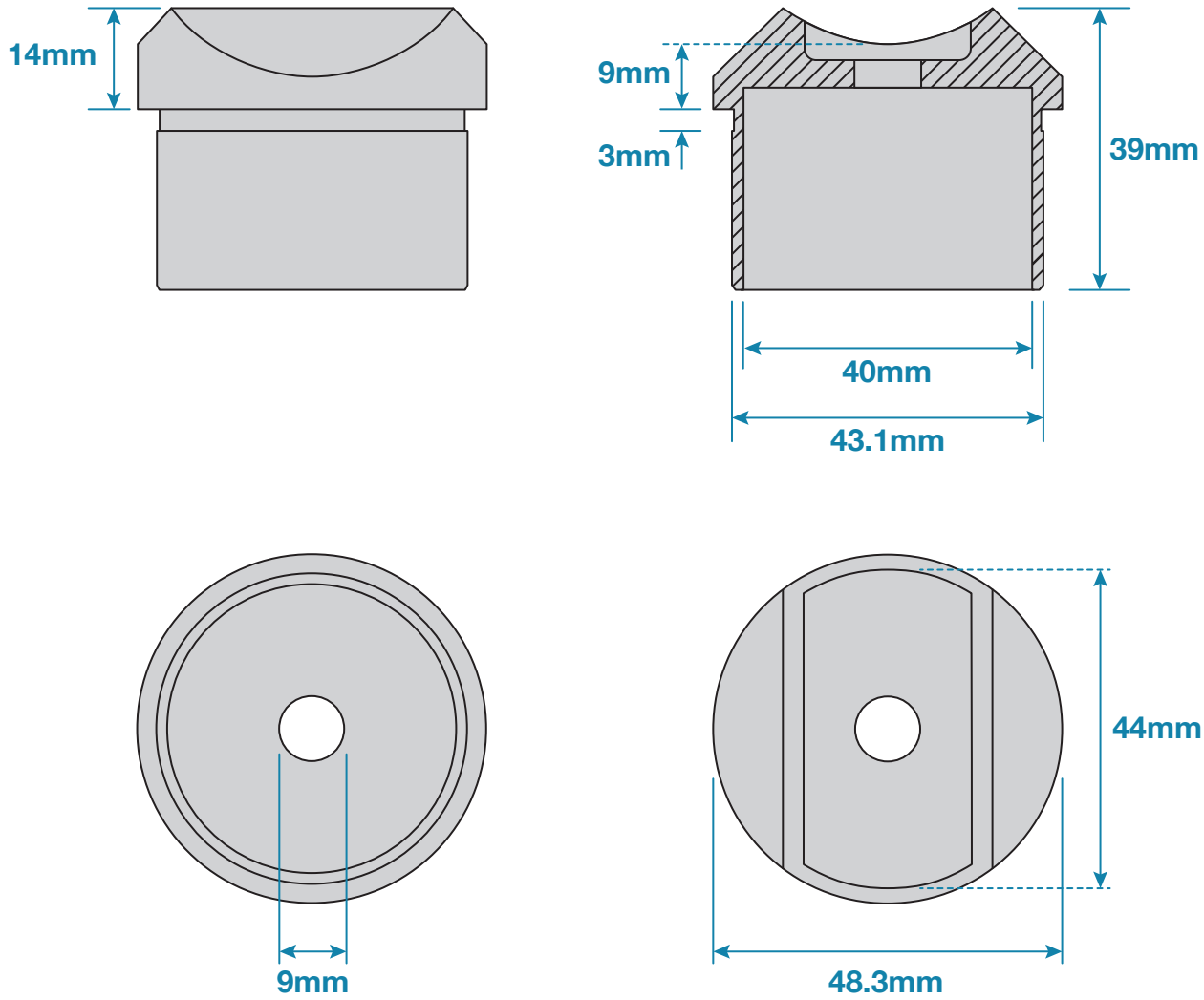

Stainless Steel 304
Tube Saddle
for 48.3 x 2.6mm Tube

code: **S4HS389**

DC Iron