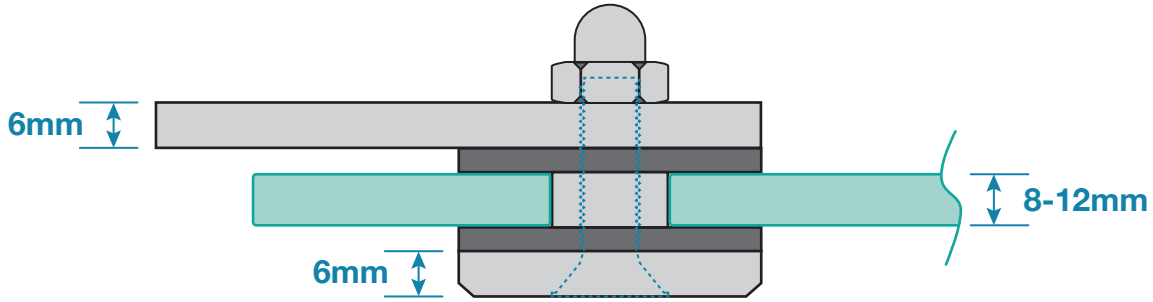

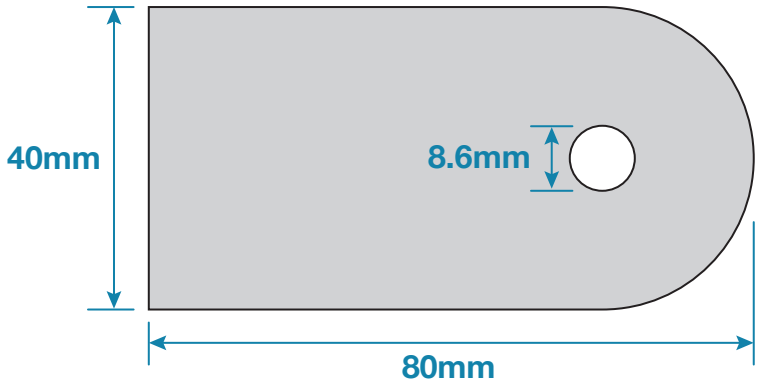

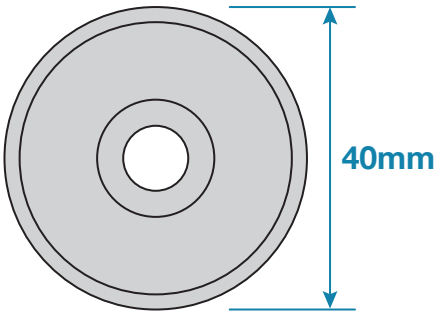

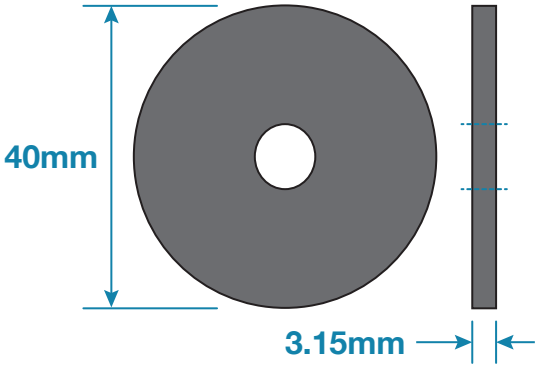

Rubber disc

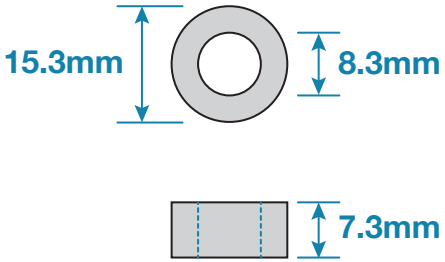

Nylon spacer

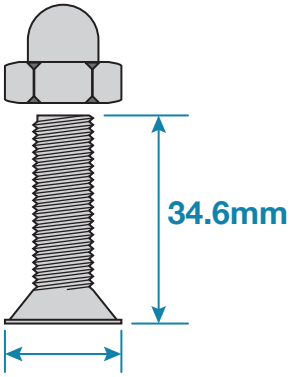

DC Iron

Mild Steel Weld On Glass Clamp

code: **WGC10**