DC Iron

Foundation Kit for CAN01 & 2

code: **AUTO102**

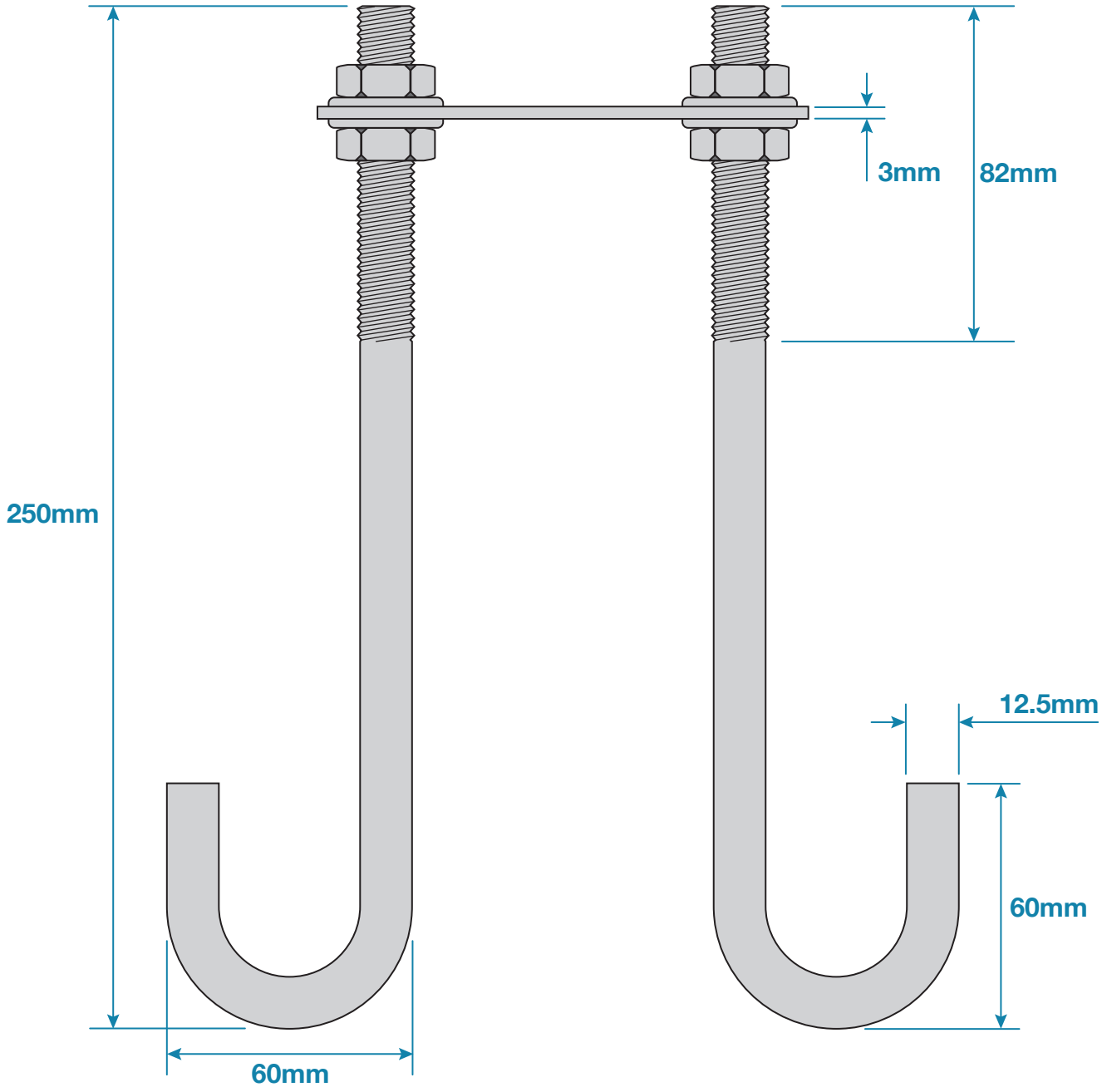

Please Note: Dimensions for guide only. Components may vary slightly from the sizes shown.

Updated: 27-01-2026

DC Iron

Foundation Kit for CAN01 & 2

code: **AUTO102**

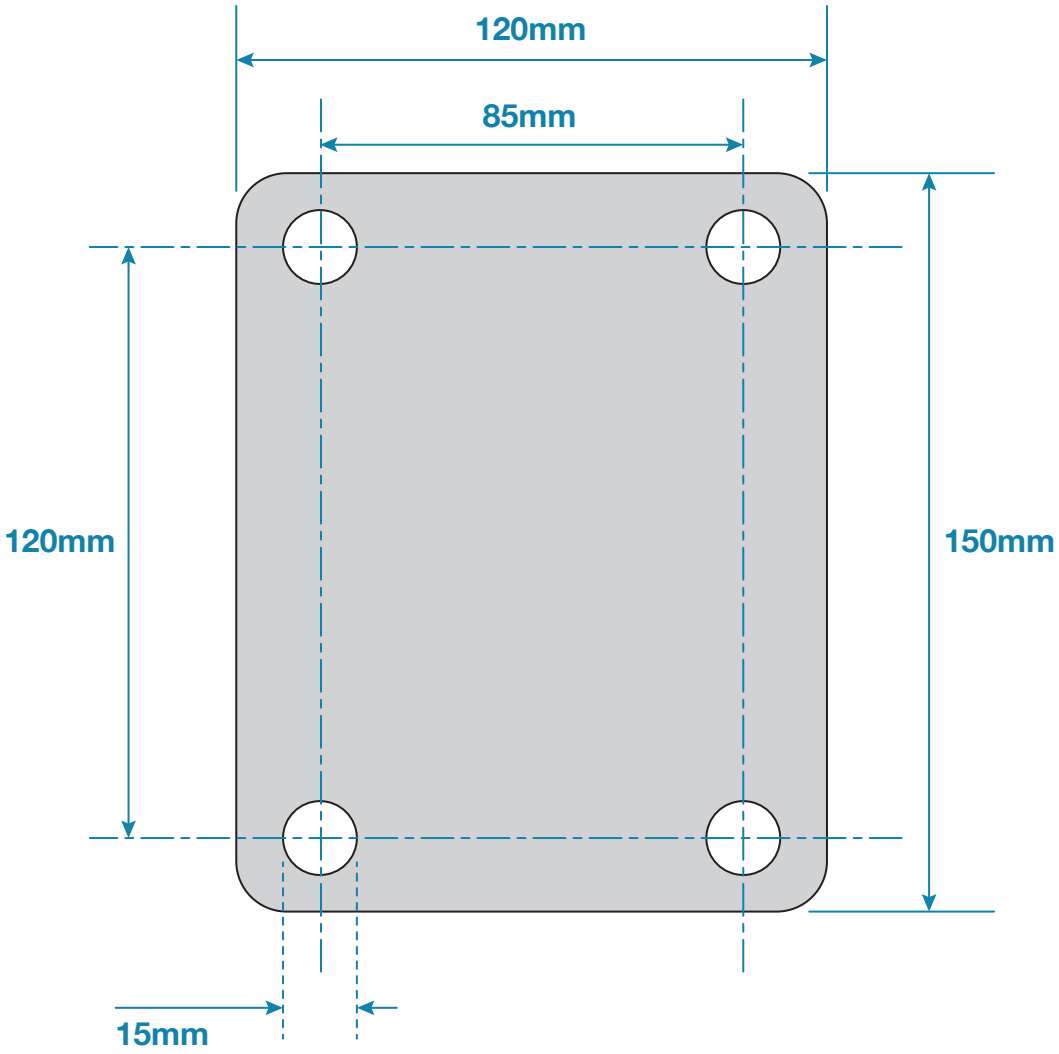

Please Note: Dimensions for guide only. Components may vary slightly from the sizes shown.

Updated: 27-01-2026