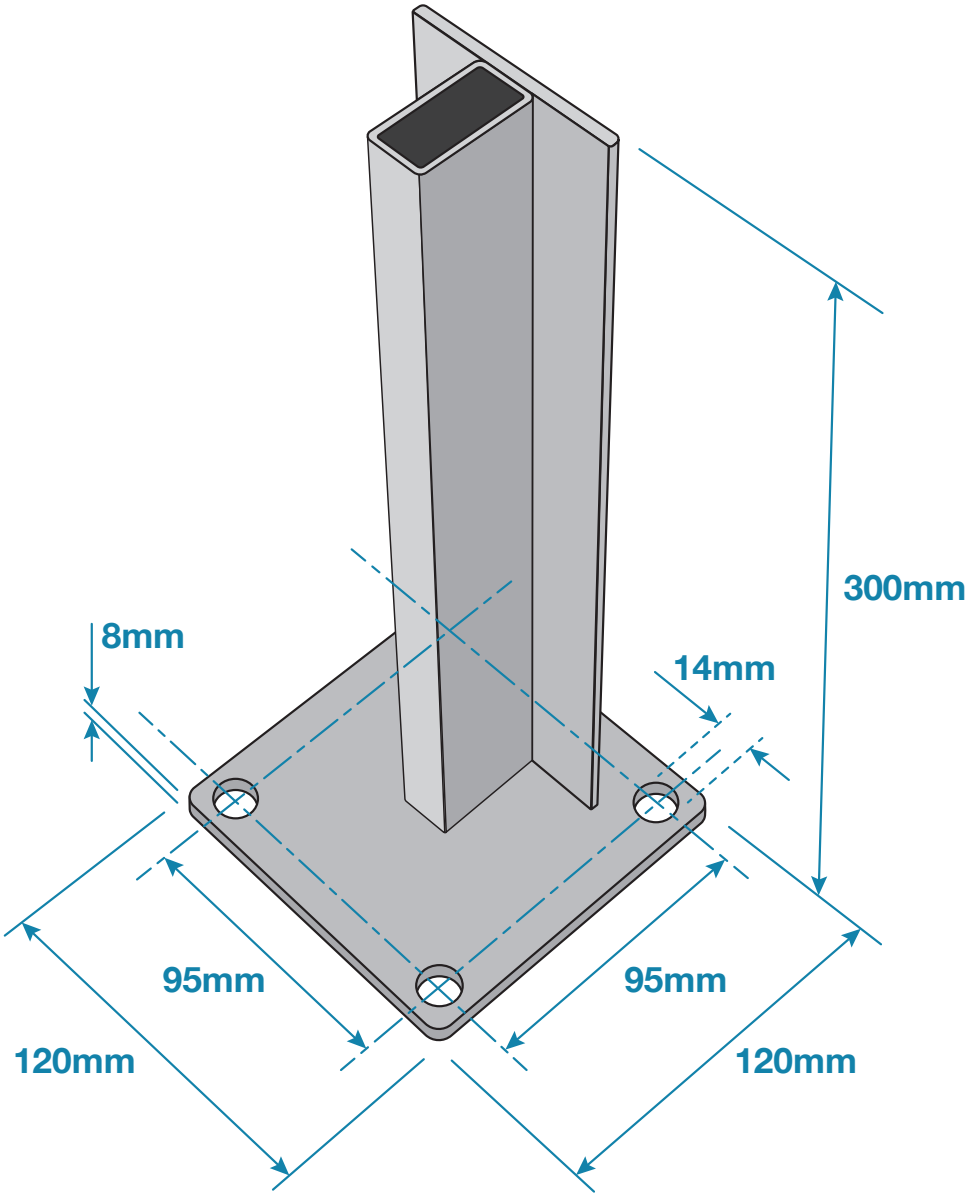

Updated: 10-03-2021

DC Iron

Fence Post Base

code: **CGS1**