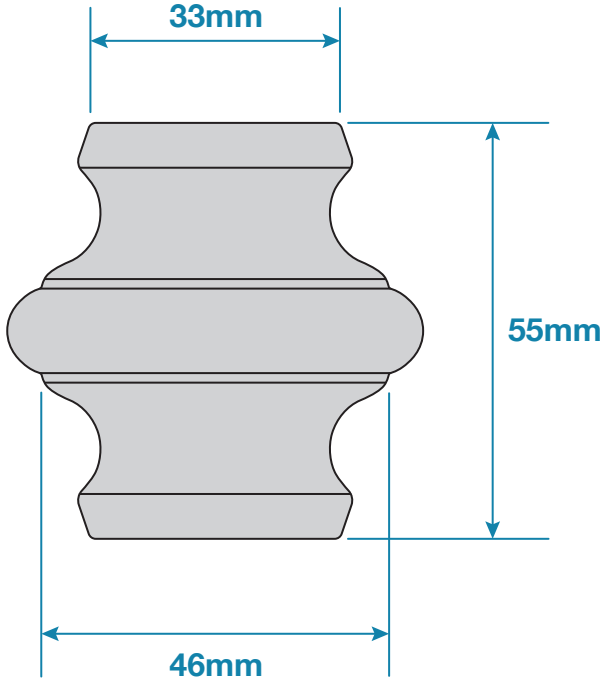

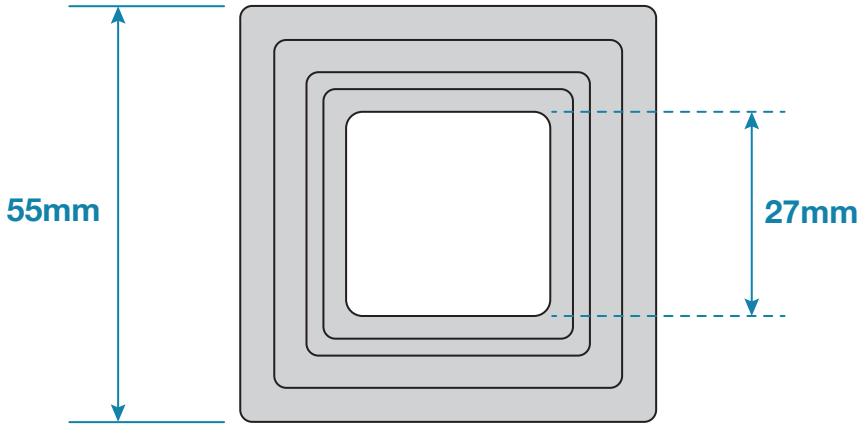

Updated: 06-04-2022

DC Iron

Collar

code: **CL34A**