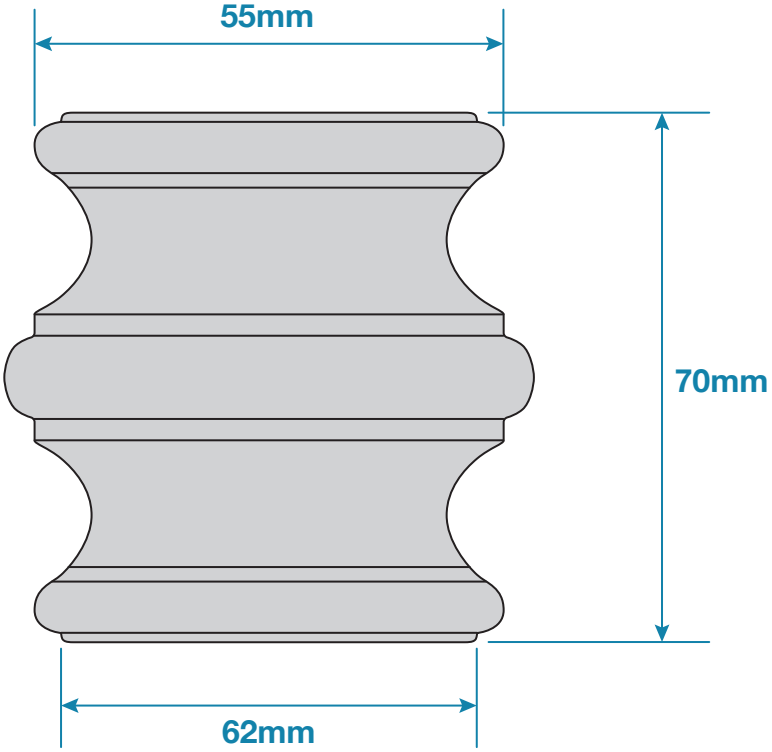


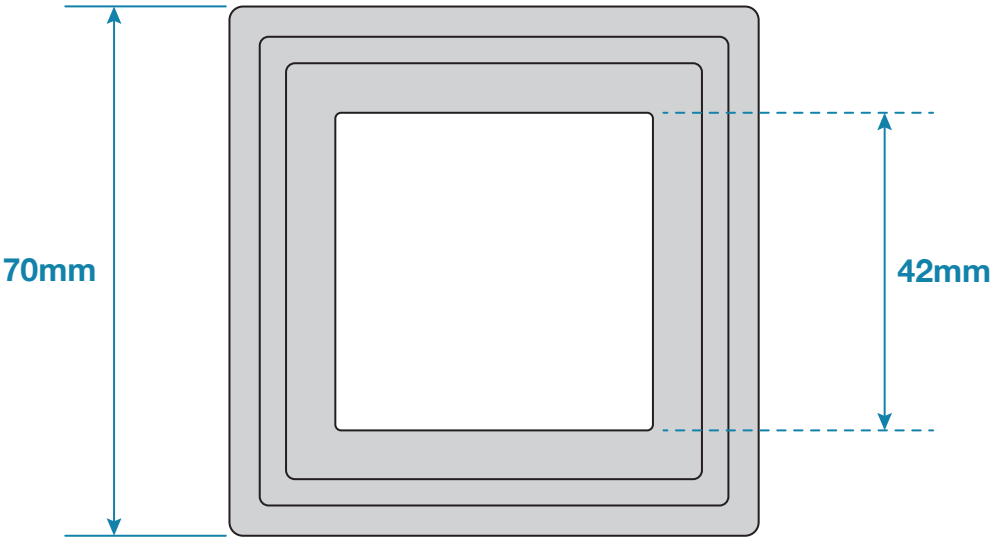


Updated: 20-04-2022

DC Iron

**Collar**

code: **CL46**