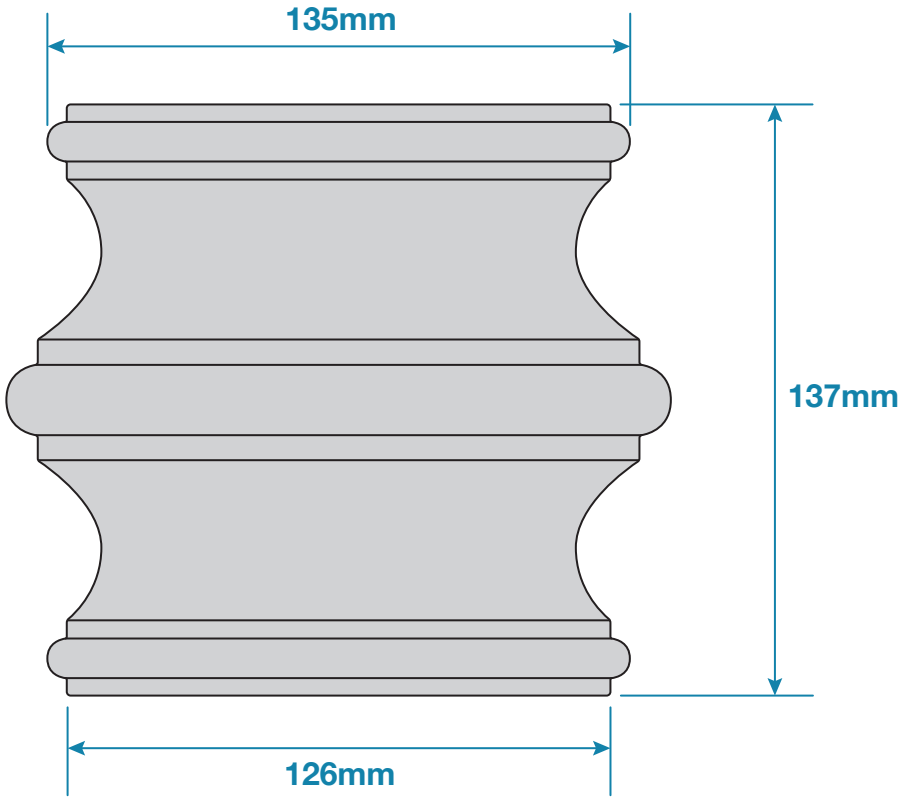


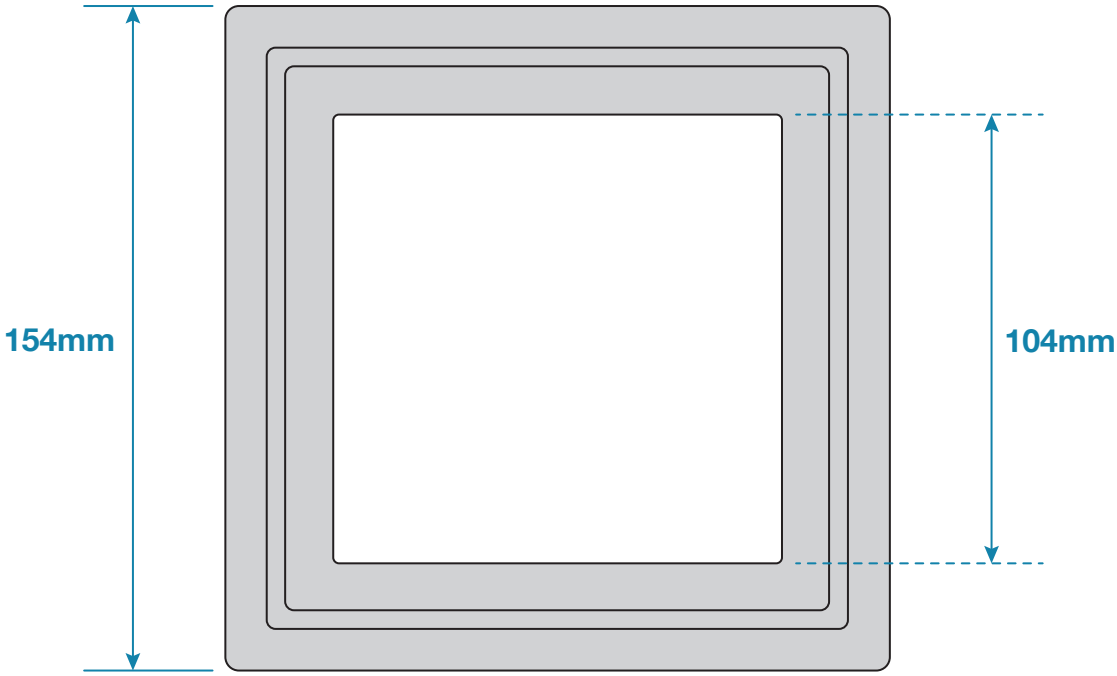


Updated: 06-05-2022

DC Iron

**Collar**

code: **CL49**