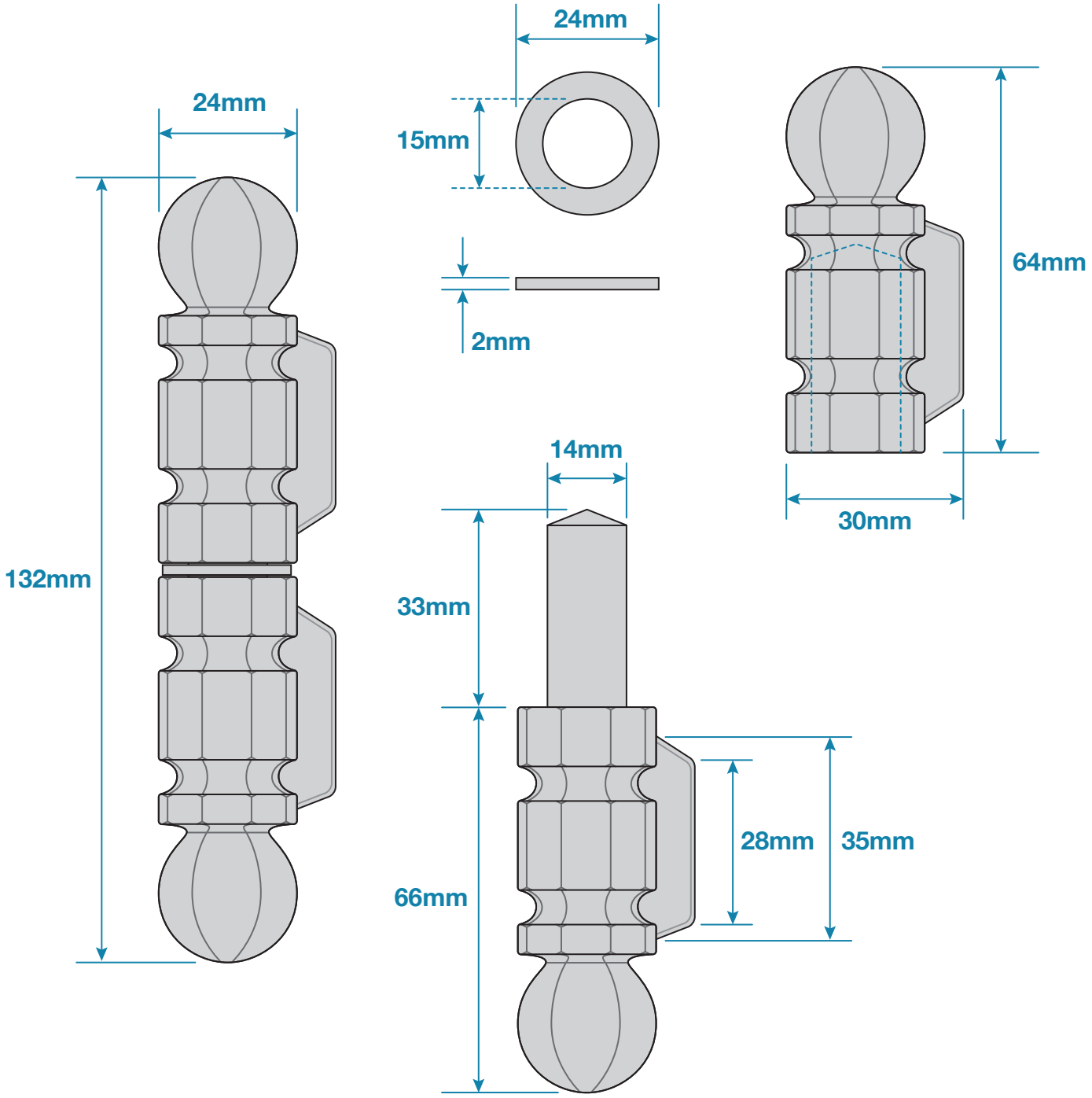

Updated: 14-02-2020

DC Iron

Ornate Hinge

code: HI/11