Retrofit Self-Closing Gate

code: **KCSGRT42**

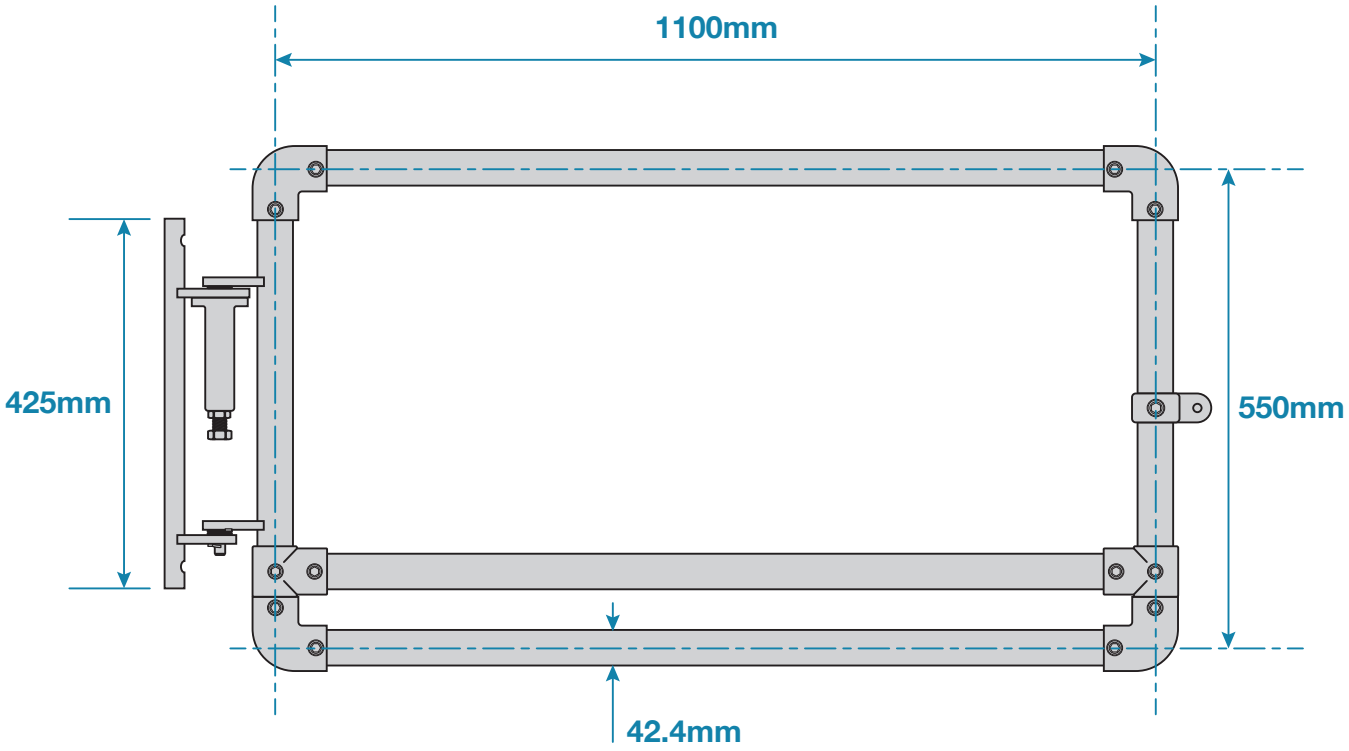

Please Note: Dimensions for guide only. Components may vary slightly from the sizes shown.

Updated: 21-05-2026

DC Iron

Retrofit Self-Closing Gate

code: **KCSGRT42**

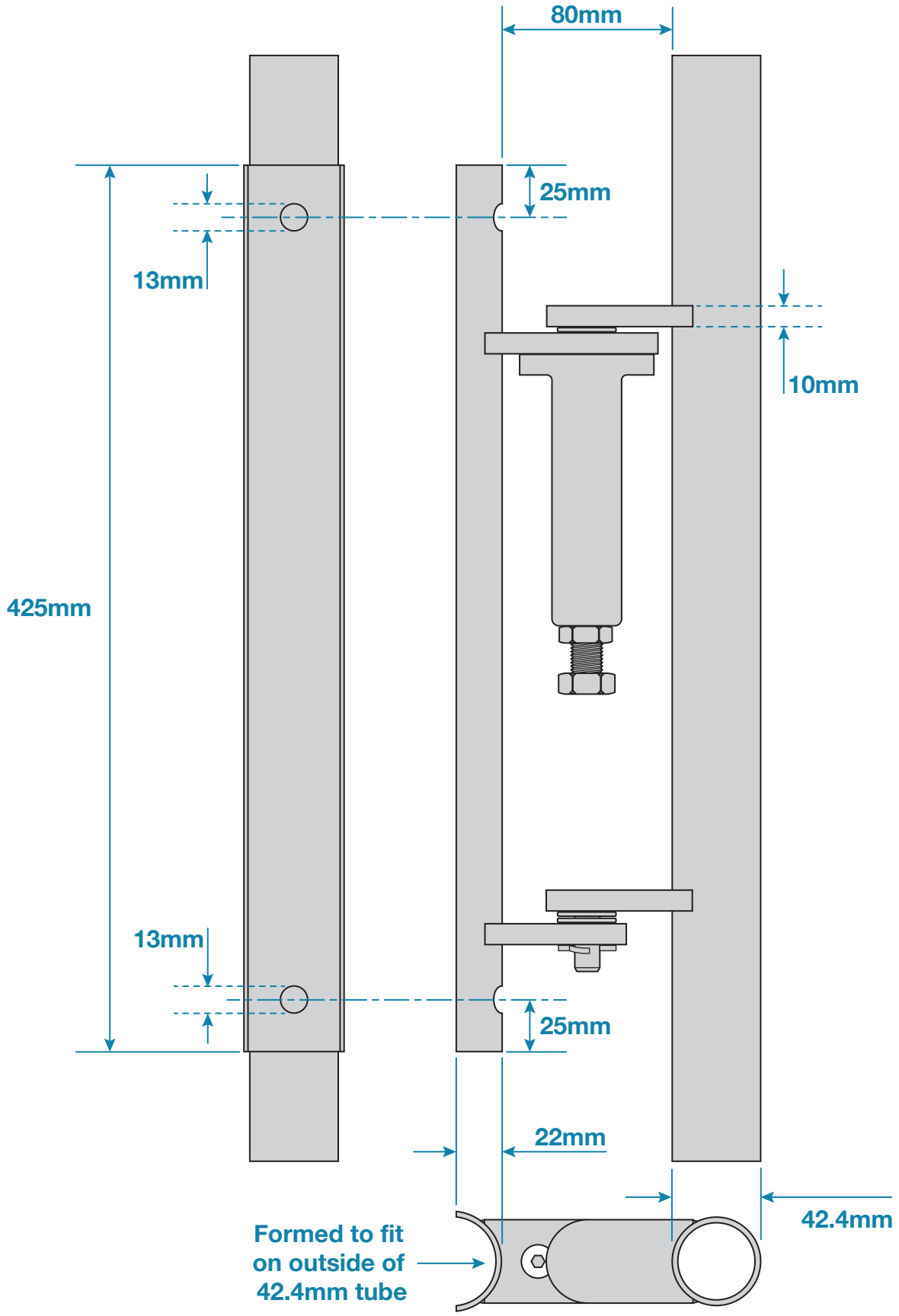

Please Note: Dimensions for guide only. Components may vary slightly from the sizes shown.

Updated: 21-05-2026