Industrial Gate Lock

code: **LOCBOX4**

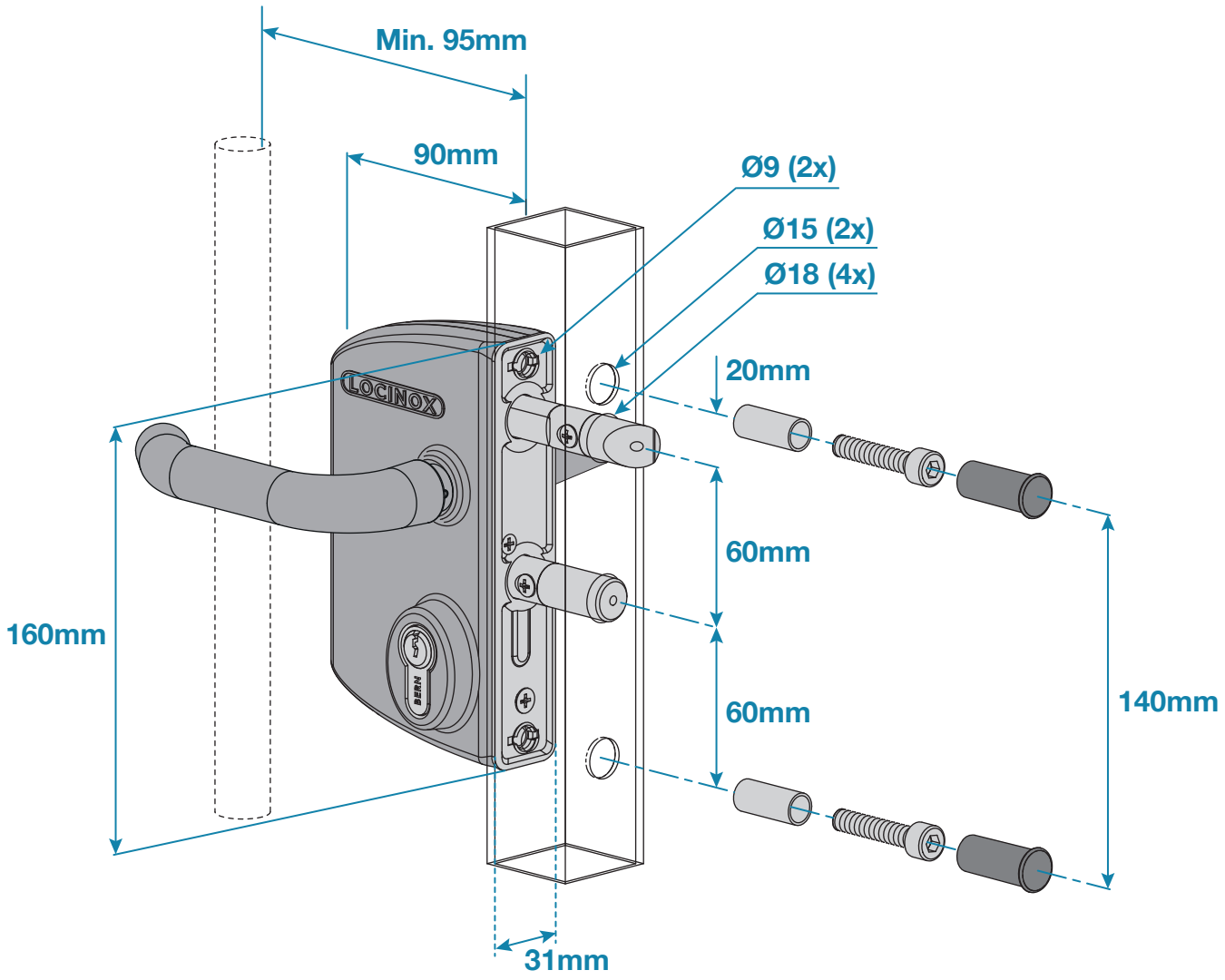

Please Note: Dimensions for guide only. Components may vary slightly from the sizes shown.

Updated: 18-11-2025