Locinox Insert Lock
For 50mm Box Section

code: **LOCIN50**

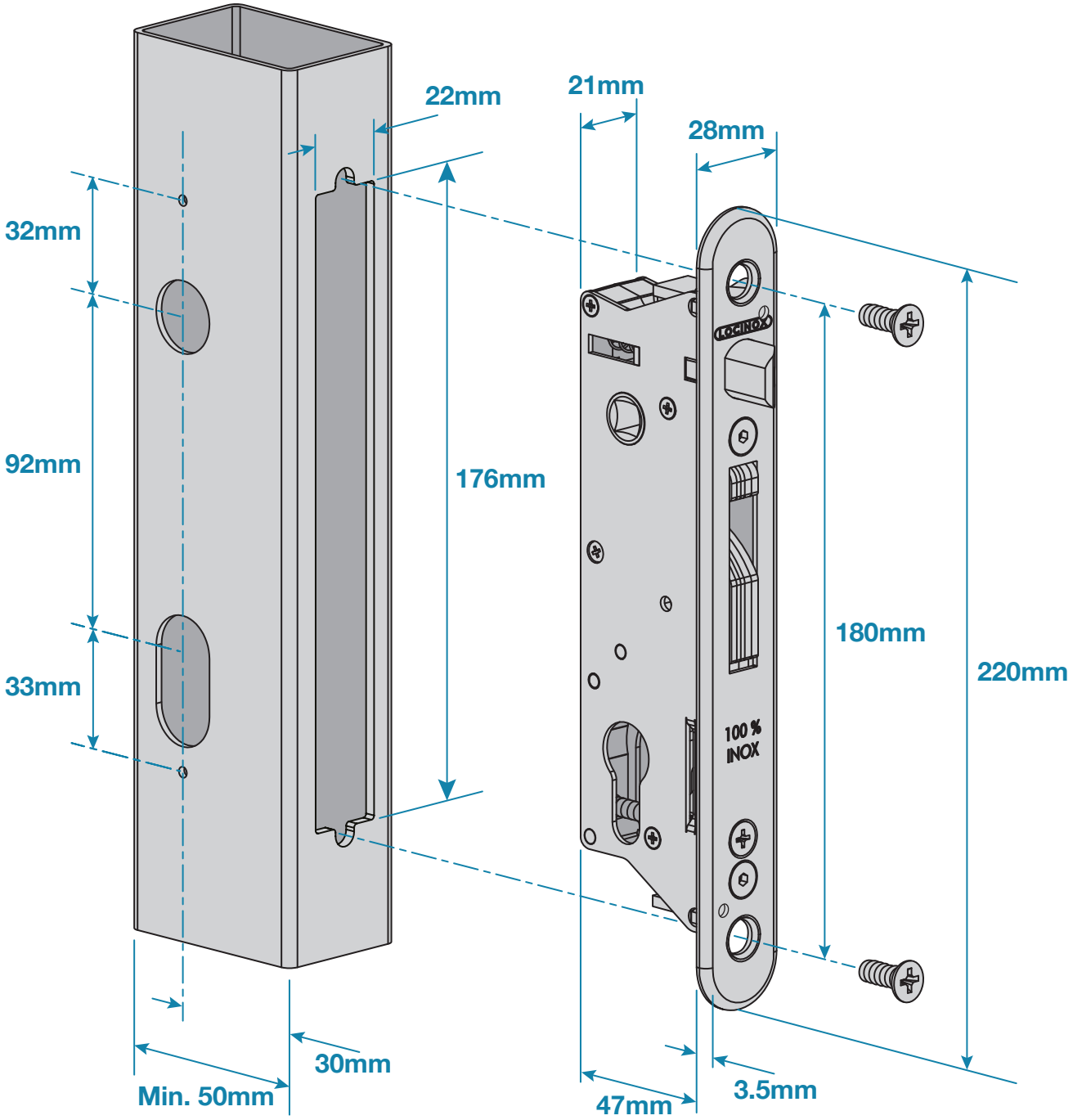

Please Note: Dimensions for guide only. Components may vary slightly from the sizes shown.

Updated: 19-06-2025