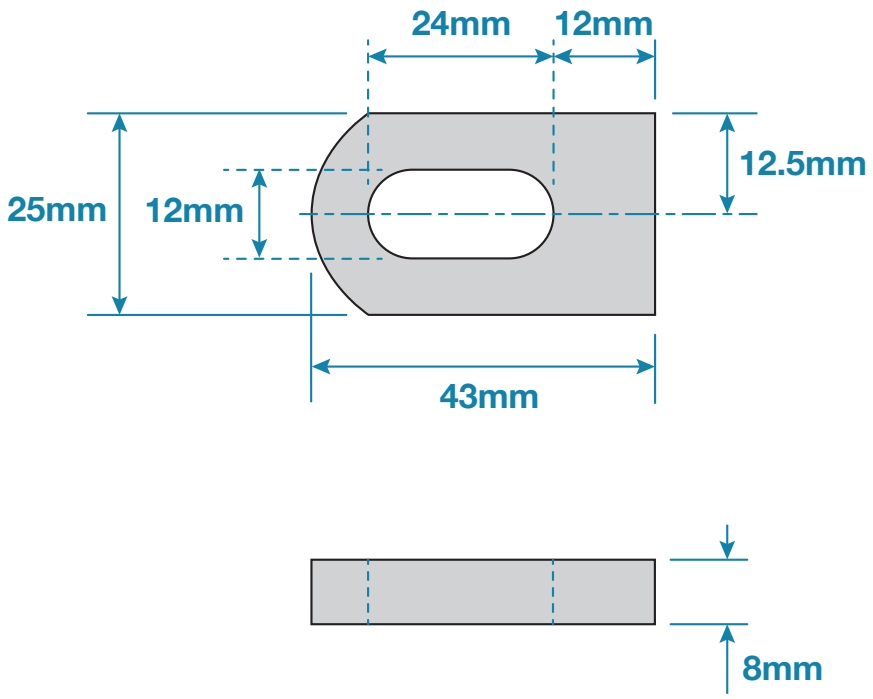

Updated: 06-04-2022

DC Iron

Slotted Fixing Lug

code: **LUG5**