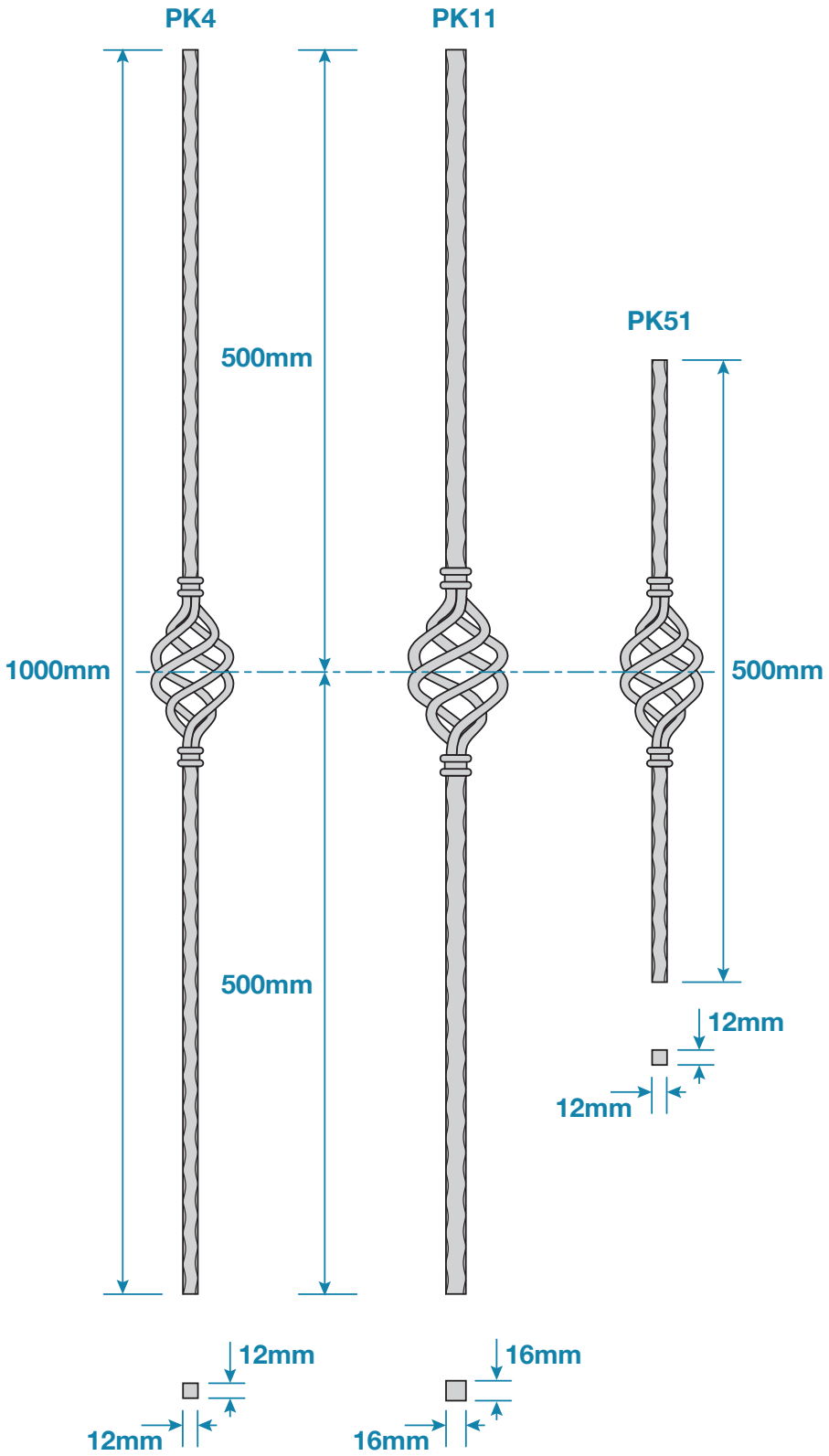

DC Iron

Single Basket Pickets

Hammerd Bar

code: **PK4, PK11 & PK51**