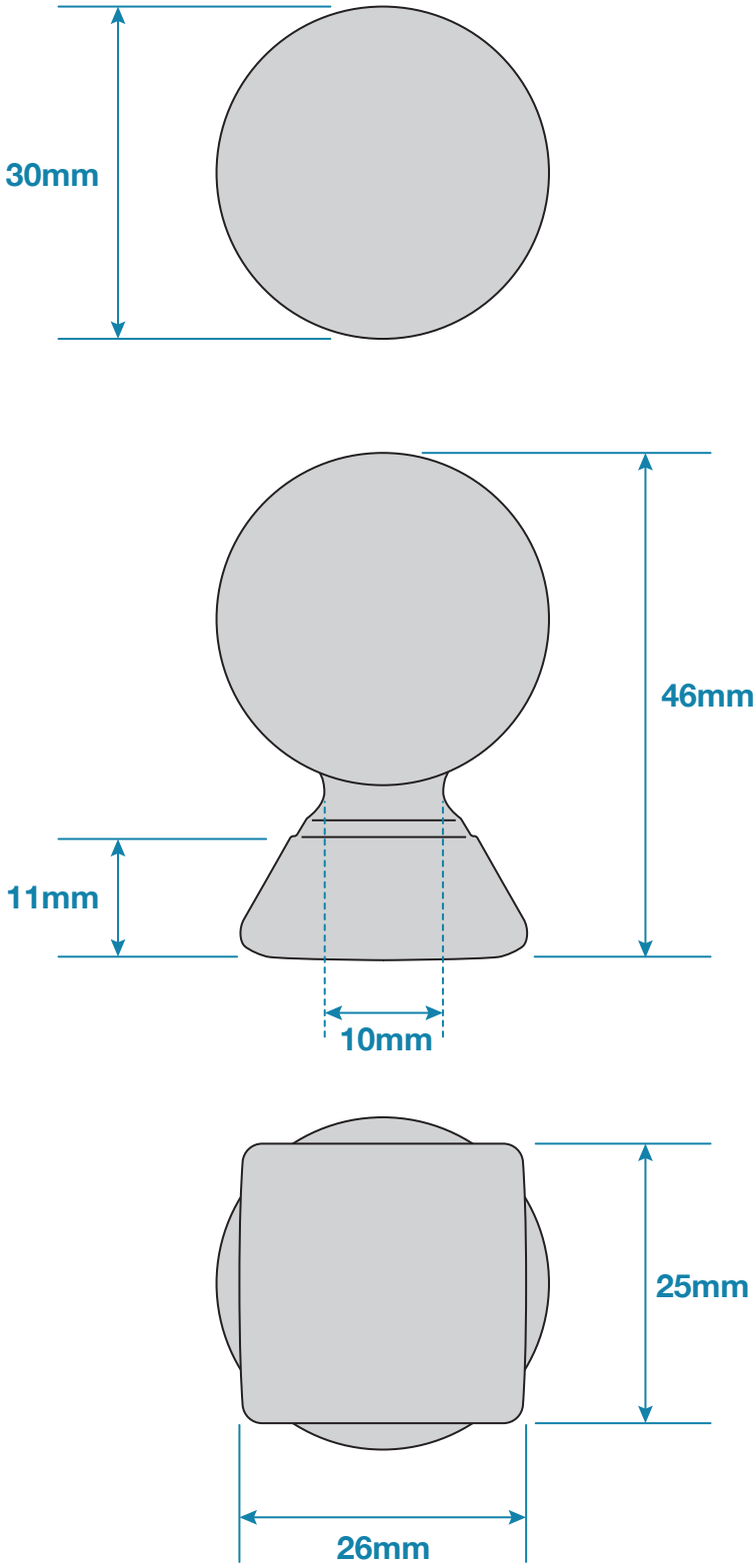

Updated: 13-09-2022

DC Iron

Post Top

code: **PT9**