Adjustable Handrail Bracket
To Suit 42.4mm Handrail

code: **S4HB220**

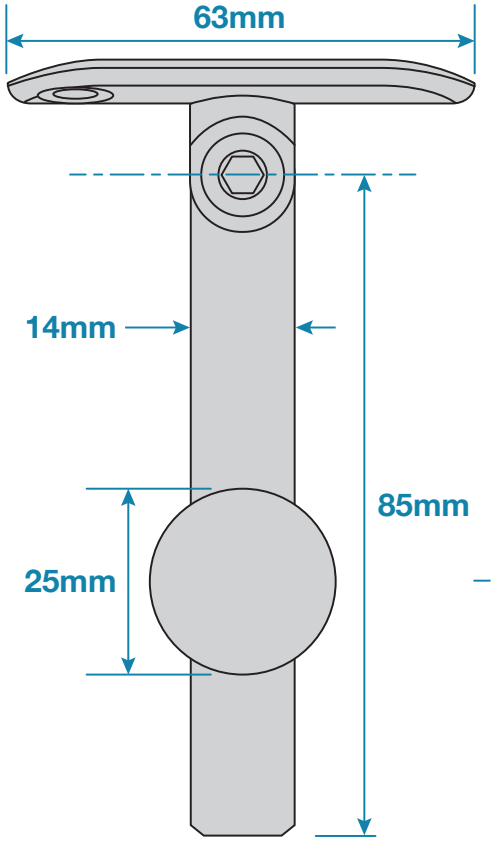

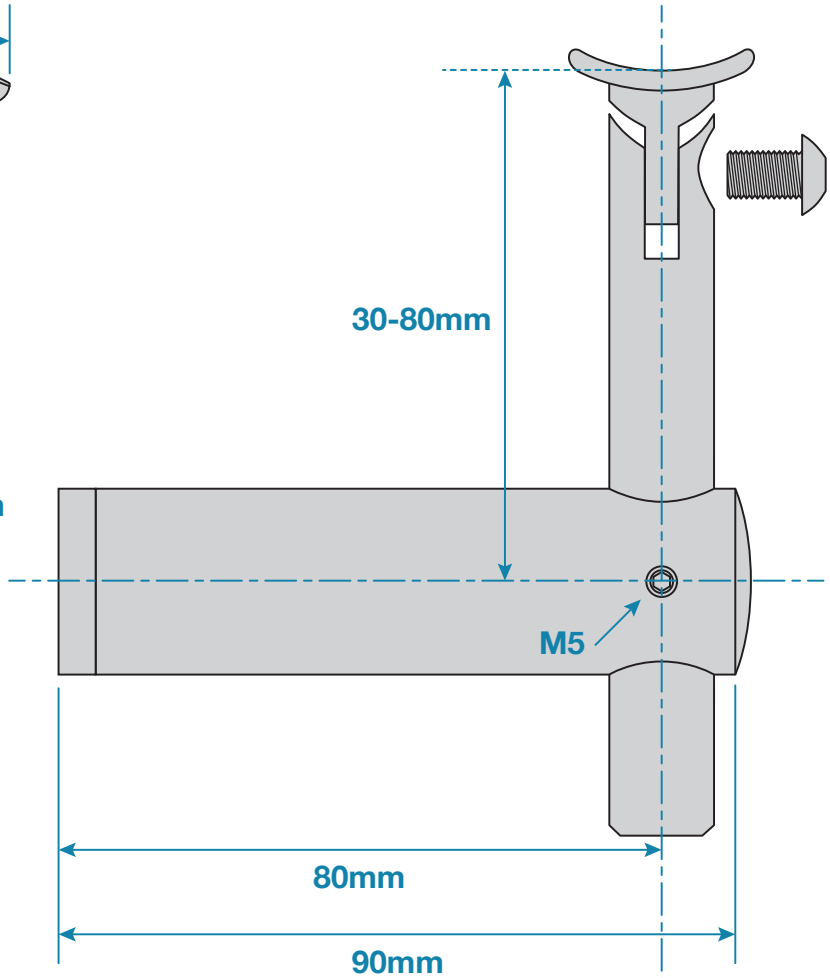

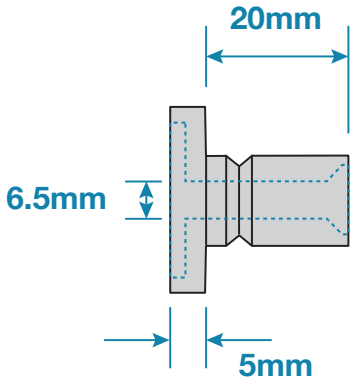

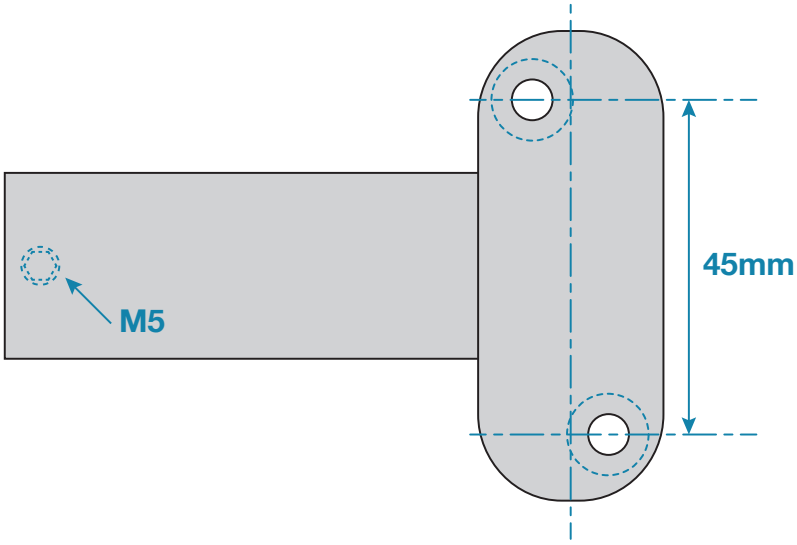

Please Note: Dimensions for guide only. Components may vary slightly from the sizes shown.

Updated: 29-11-2023