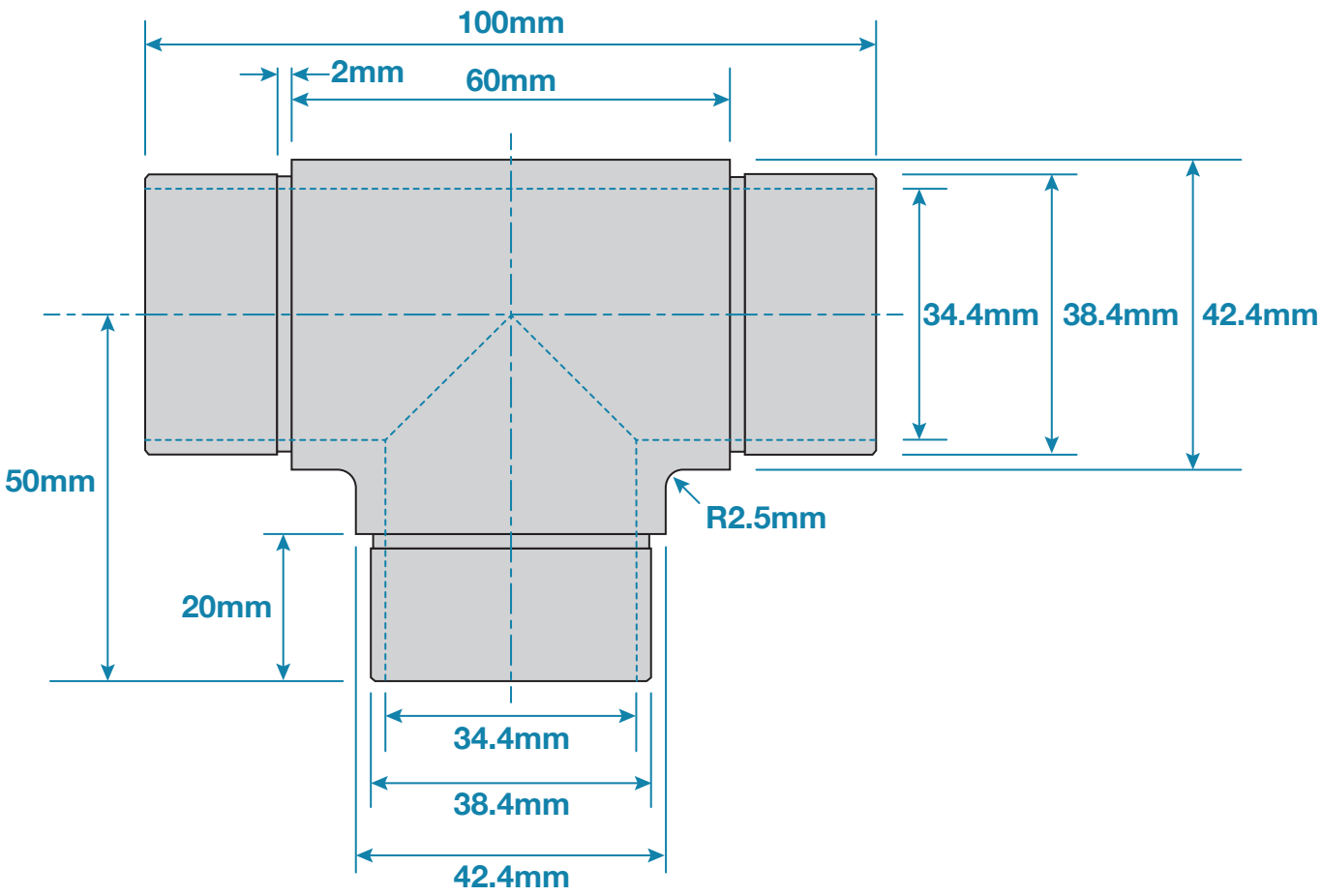

Stainless Steel 316
Tee
for 42.4 x 2mm Tube

code: **SSE13042**