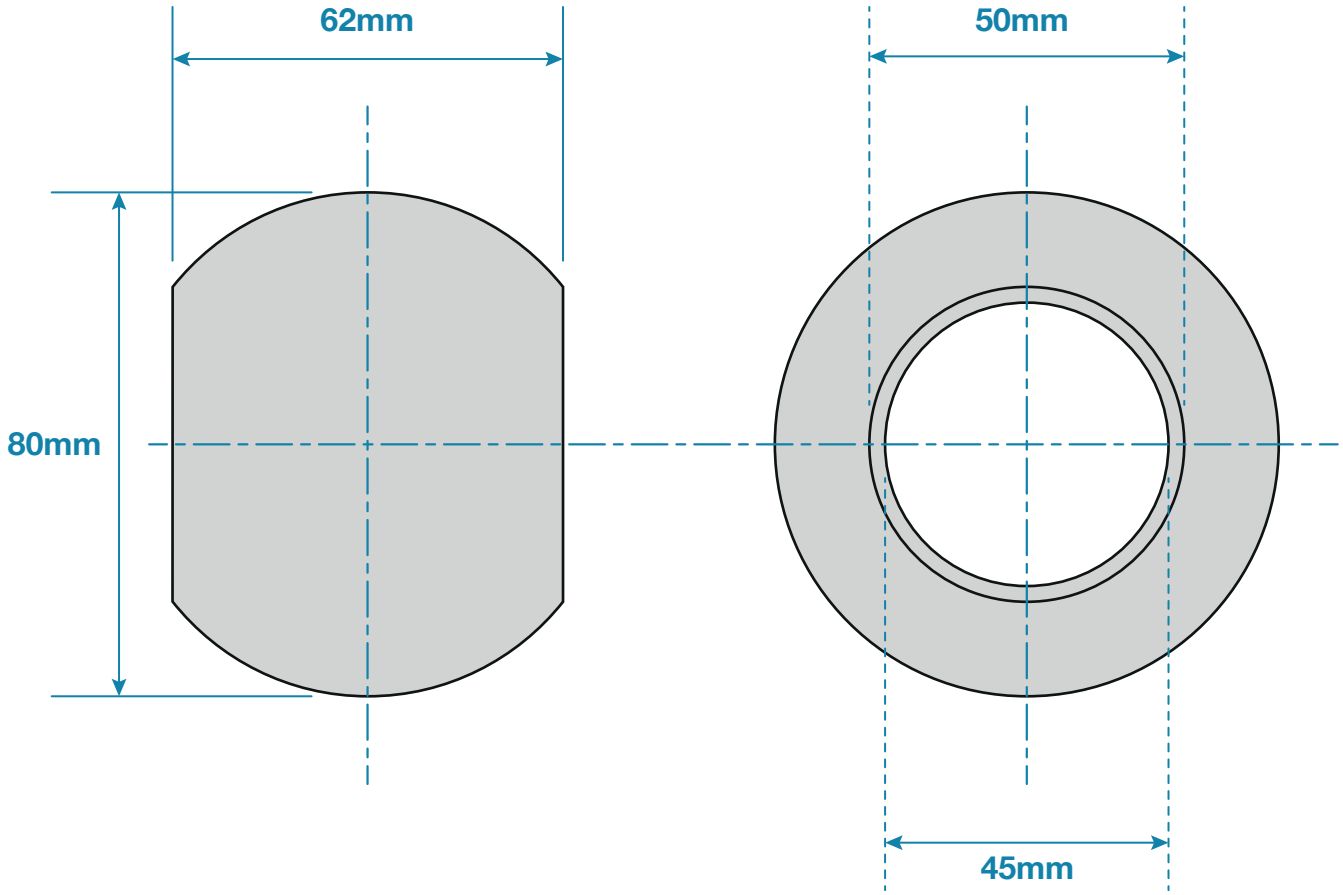

Updated: 01-11-2021

DC Iron

Tubular Handrail
Standard Ball Fitting

code: **TB4**